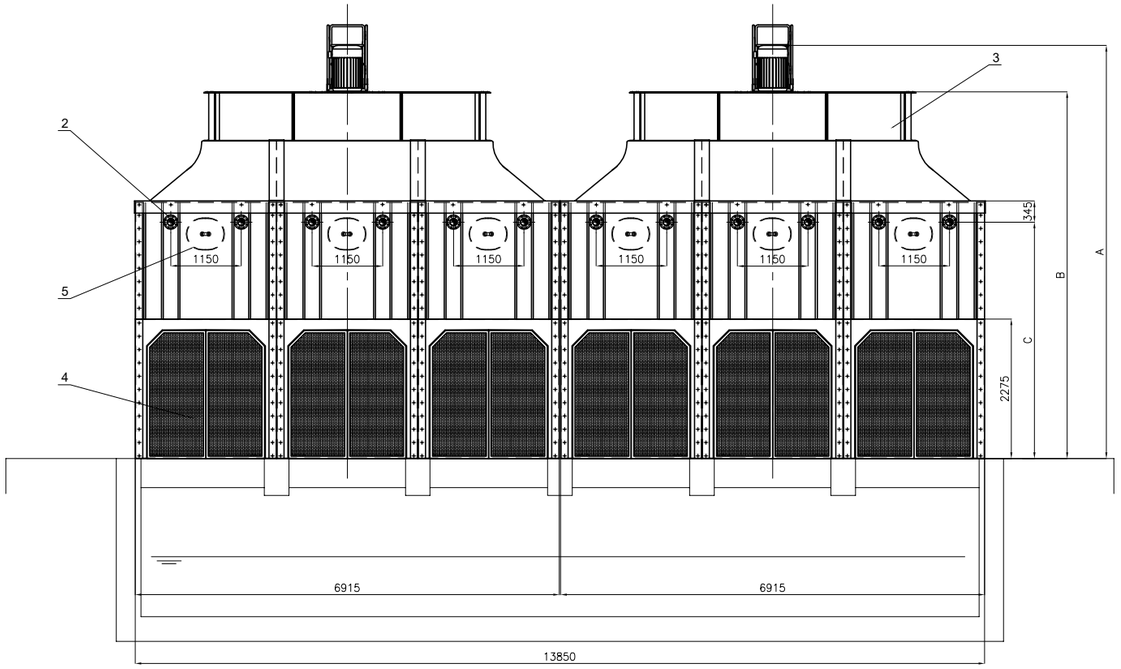

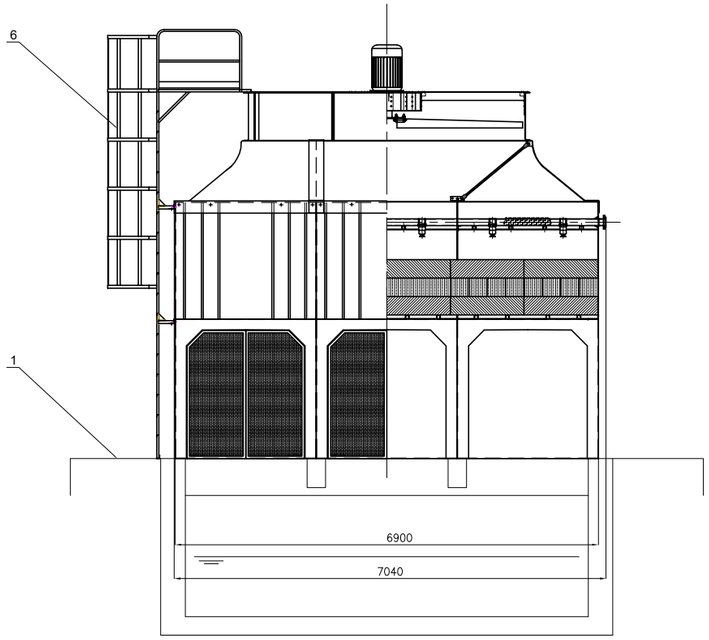

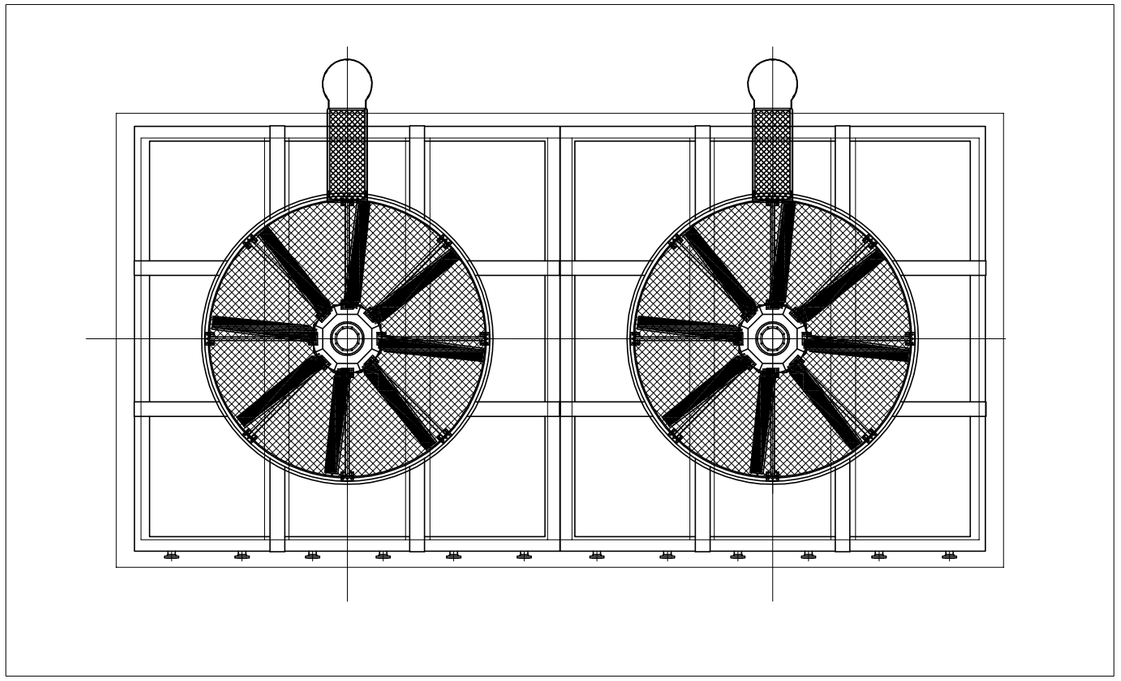

Comments:

6	Ladder + Antifall Protection	Back Side
5	Stainless Steel Manhole	Back Side
4	Air inlet louvre	
3	Fan Stack	
2	Inlet Flanges DN100 PN10 DIN2576	Front Side
1	Concrete Basin	

	A (mm)	B (mm)	C (mm)	Net weight (kg)	Operation weight (kg)	Maximum weight (kg)
EWK 9000/06	6795	5980	3855	16800	24300	24300
EWK 9000/09	6795	5980	3855	16800	24300	24300

Revision index: 1

	Name	Sign	Date
Drawn by	M.Martín		20/12/22
Reviewed	M.Martín		20/12/22

EWK Torres de Refrigeración S.A

Paseo de la Castellana,115 - 4º Izquierda
Fact: Torrelaguna 83, Fuente el Saz del Jarama
Madrid, Spain

EWK

Production Department - Technical Office

Scale 1:100

EWK 9000 MODULAR

Drawing number: EWK 9000

Status: Approved

Language: EN

Page: 1/1

DIN A3

Rev.	Changes	Date	Name
1	Weights	16/12/22	M.Martín